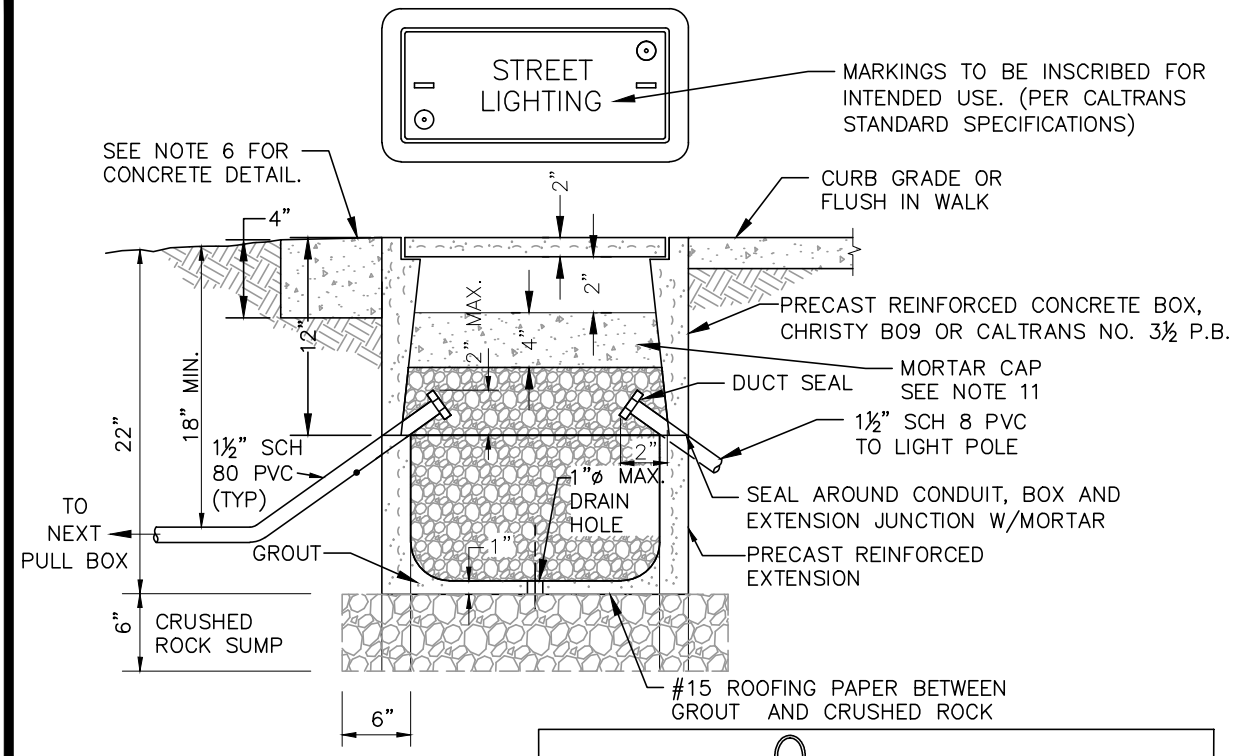


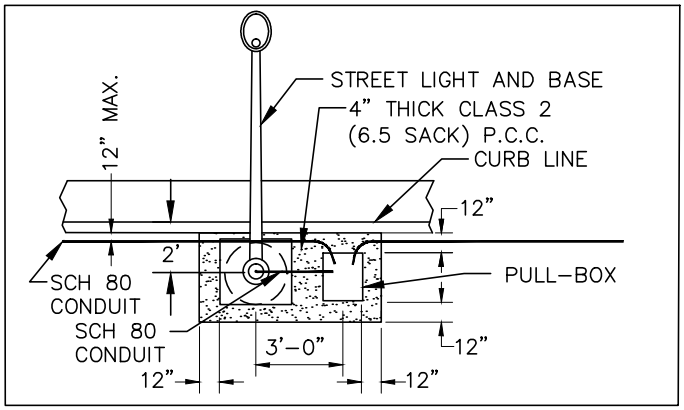


NOTES:

1. PULL BOXES SHALL NOT BE INSTALLED OVER JOINT TRENCHES, IN DRIVEWAYS OR IN ROADWAYS.
2. PULL BOX SPACING SHALL NOT EXCEED 200' AND SHALL BE REQUIRED AT ALL CONDUIT CHANGE OF DIRECTION.
3. REMOVE LIDS BEFORE POURING CONCRETE AROUND PULL BOXES.
4. PULL BOXES SHALL BE GROUTED PRIOR TO INSTALLATION OF CONDUCTORS. SLOPE GROUT TOWARD THE DRAIN HOLE. PLACE A LAYER OF ROOFING PAPER BETWEEN THE CRUSHED ROCK AND THE GROUT.
5. WRAP PULL BOX WITH ROOFING PAPER BEFORE BACKFILLING.
6. INSTALL A ONE-FOOT RING OF P.C. CONCRETE, FOUR INCHES THICK, AROUND THE WRAPPED PULL BOXES INSTALLED IN DIRT OR GRASS AREAS. SLOPE P.C. CONCRETE TO DRAIN AWAY FROM THE PULL BOX.
7. PULL BOXES SHALL BE 'LEVELED' TO FINISH GRADE.
8. PULL BOX COVERS SHALL BE EQUIPPED WITH HOLD DOWN BOLTS.
9. ALL PULL BOXES SHALL BE INSTALLED WITH EXTENSIONS.
10. PLACE CLEAN PEA GRAVEL TO WITHIN 8" OF TOP OF PULL BOX AFTER INSTALLING THE WIRING.
11. INSTALL 4" THICK MORTAR CAP OVER CLEAN PEA GRAVEL.

| | | |
|---|---|---|
| DRAWN BY J.S.<br>DATE 6/9/1997 | **COUNTY OF MADERA** | DRAWING NO. |
| REVISED BY J.S.C.<br>DATE 3/23/2011 | STREETLIGHT CONCRETE PULL BOX | ST-22D |

S:\ENG\STANDARD PLANS\County\ST-22D Street Light Pull Box.DWG 2-27-12 12:57:43 PM jchandler